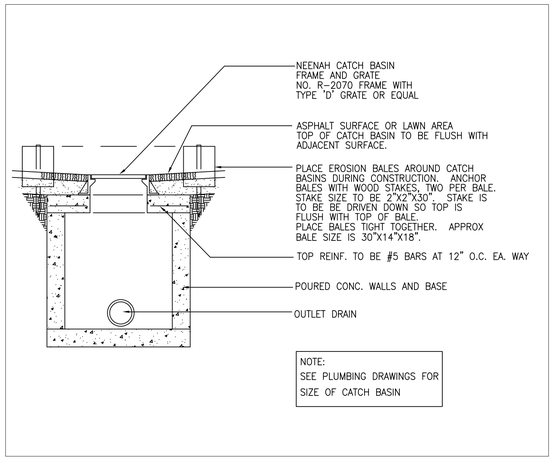

1 C201 CATCH BASIN DETAIL
1 1/2" = 1'-0"

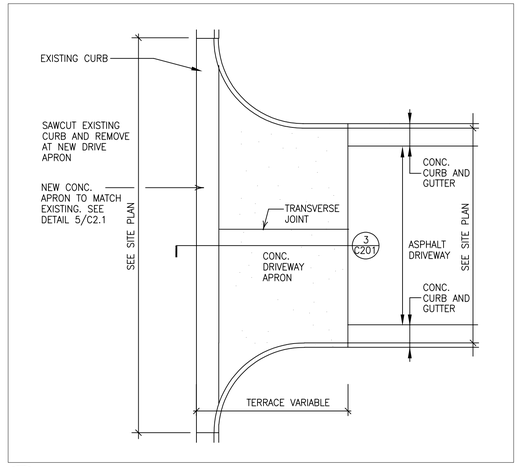

2 C201 DRIVEWAY APRON
N.T.S

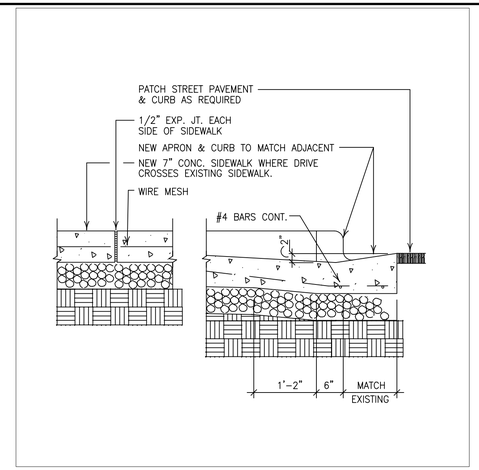

3 C201 DRIVEWAY APRON SECTION
N.T.S.

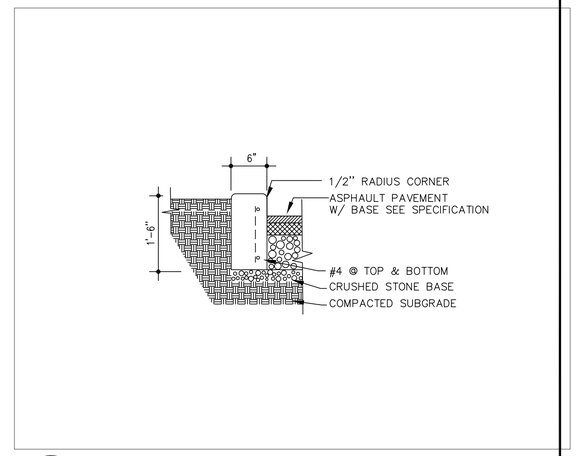

4 C201 BULK HEAD CURB
N.T.S.

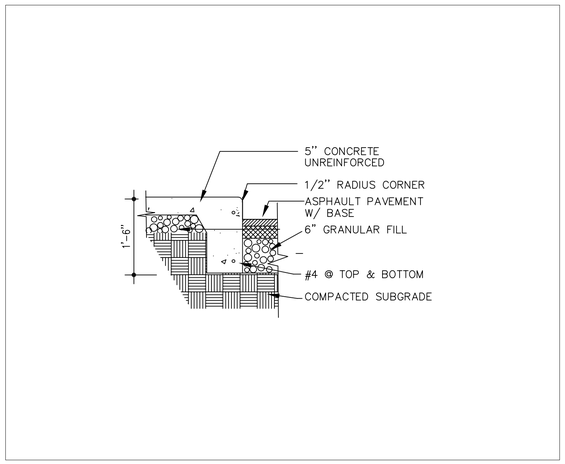

5 C201 CURB AT SIDEWALK
3/4" = 1'-0"

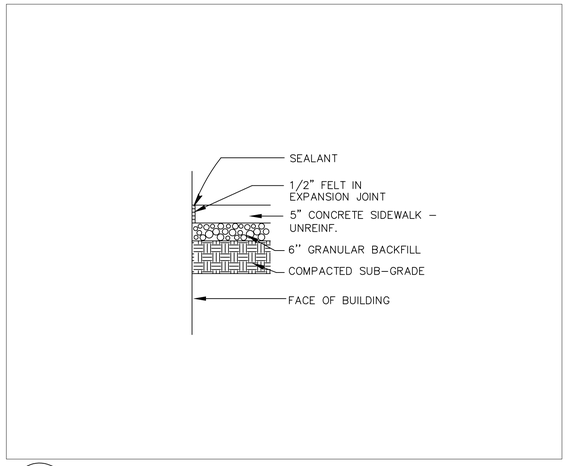

6 C201 SIDEWALK AT BUILDING
3/4" = 1'-0"

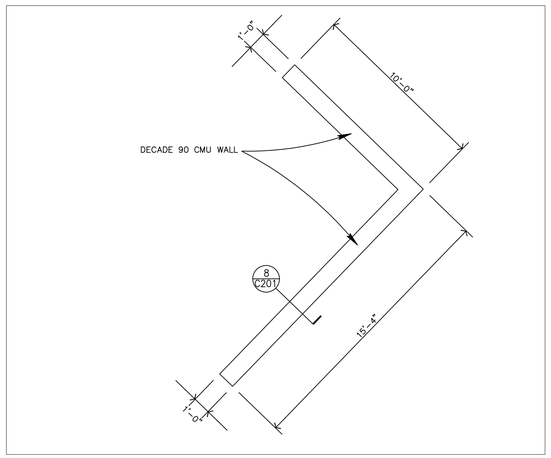

7 C201 GARBAGE SCREEN WALL PLAN
1/4" = 1'-0"

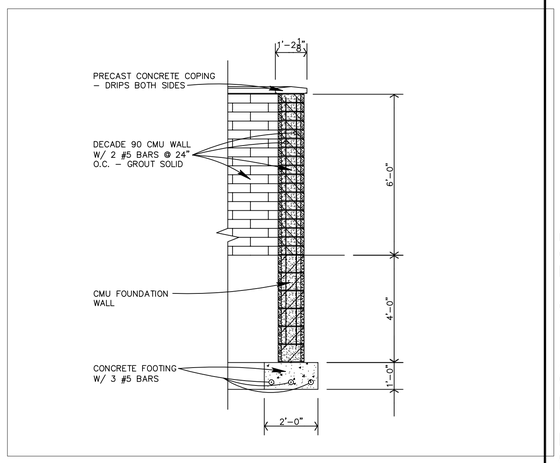

8 C201 GARBAGE SCREEN WALL SECTION
3/8" = 1'-0"

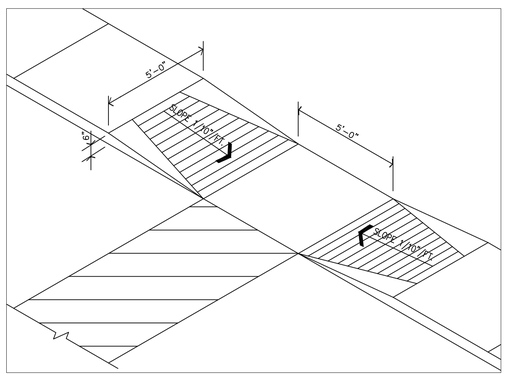

9 C201 SIDEWALK RAMP
N.T.S.

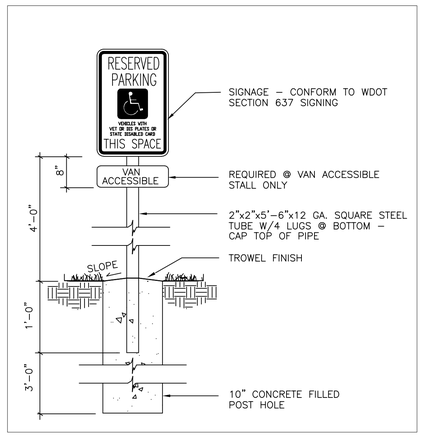

10 C201 H.C. PARKING SIGNAGE
N.T.S.

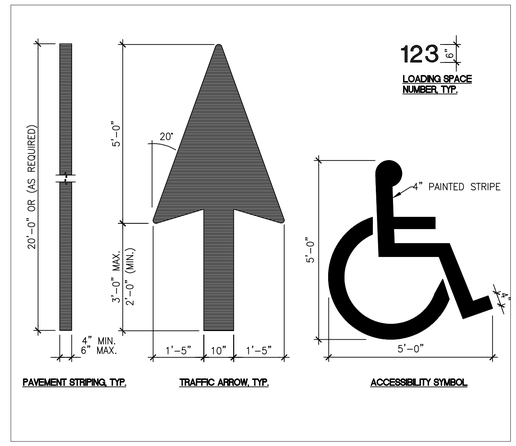

11 C201 PAVEMENT MARKINGS
1/2" = 1'-0"

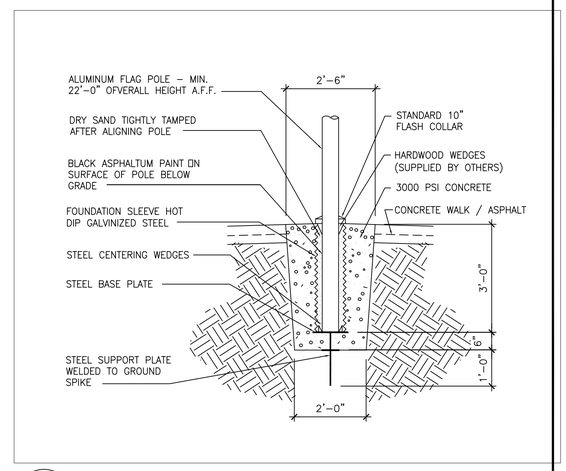

12 C201 FLAG POLE BASE DETAIL
N.T.S.

FISCHER-FISCHER-THEIS, INC.
ARCHITECTS • ENGINEERS • PLANNERS
S22 W22660 BROADWAY • WAUKESHA, WISCONSIN 53186-8199
(262) 547-6969 • FAX (262) 547-6960 • E-MAIL: fft@wscpc.com

NEW FIRE STATION #2 FOR
GERMANTOWN FIRE DEPARTMENT
EDISON DRIVE
GERMANTOWN, WISCONSIN 53022

05/12/00	TJV

PROJECT NO.
99054A

SHEET NO.
C201